DUVAR-TAVAN PROFİLLERİ
Wall and Ceiling Profiles
AS U137-150 H=15mm

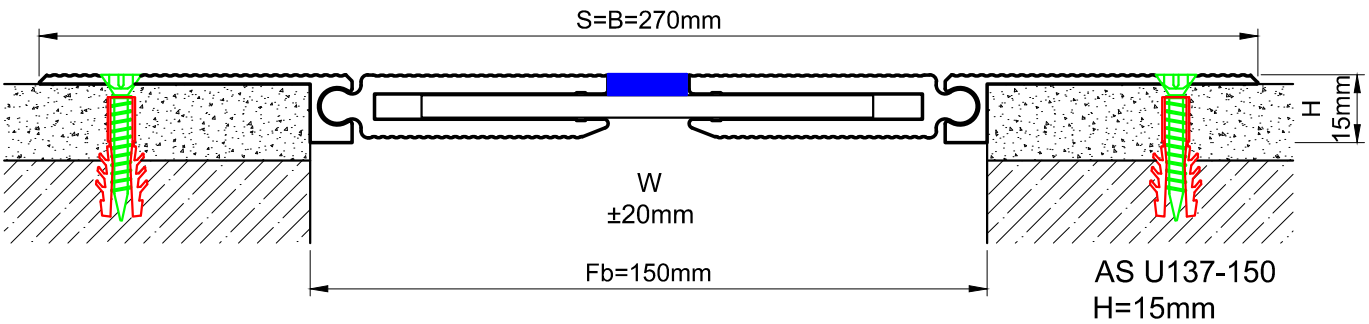

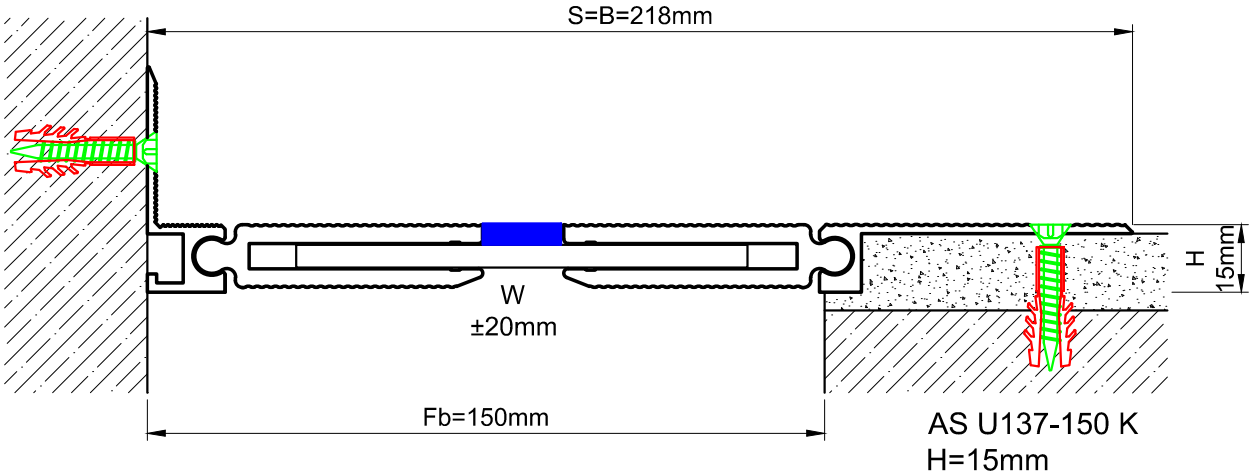

Profil No Profile Number	AS U137-150	AS U137-150 K
Fb (mm)	150	150
H (mm) yaklaşık approx.	15	15
W± (mm) yaklaşık approx.	±20	±20
Renk Color	Alüminyum: Natürel Aluminum: Natural	
Malzeme Material	Alüminyum Aluminum	
Standart Uzunluk Standard Length	3	