Asteknik Mühendislik

Sismik Zemin Profilleri
Seismic Floor Joint Profiles
AS A253-100 H=35mm

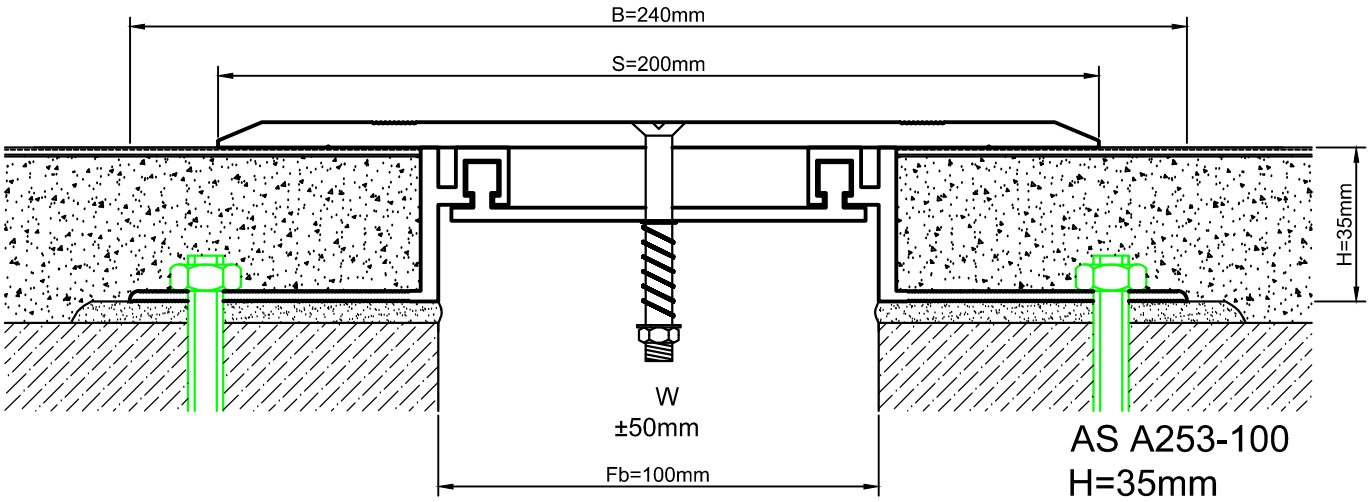

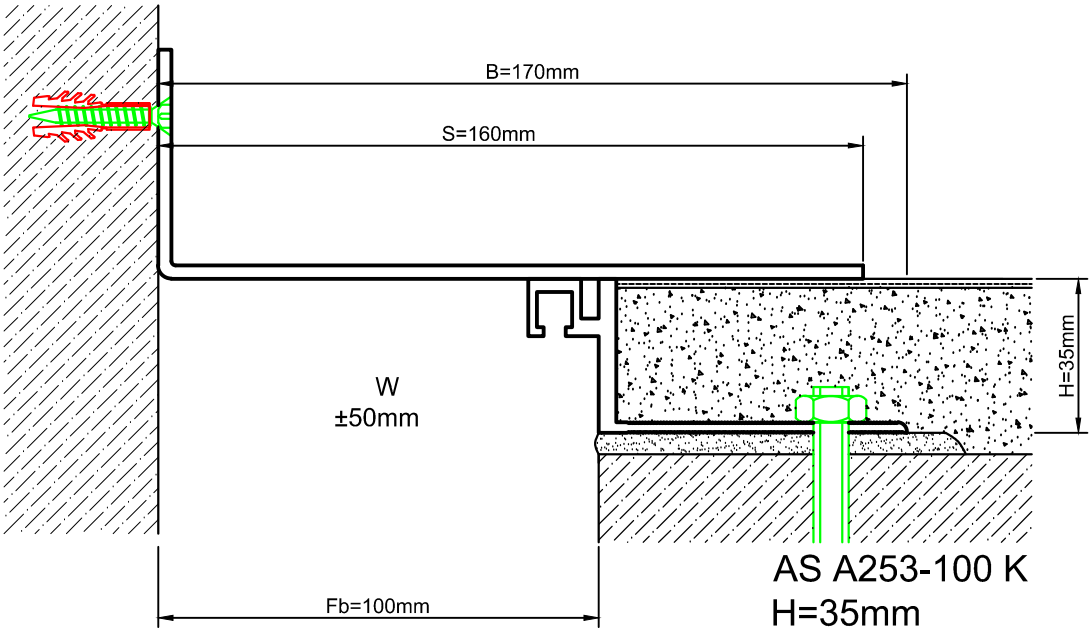

Profil No Profile Number	AS A253-100	AS A253-100 K
Fb (mm)	100	100
H (mm) yaklaşık approx.	35	35
W± (mm) yaklaşık approx.	±50	±50
Renk Color	Alüminyum: Natürel Aluminum: Natural	
Malzeme Material	Alüminyum Aluminum	
Standart Uzunluk Standard Length	3	
Yükleme Kapasitesi Load-Bearing Capacity		